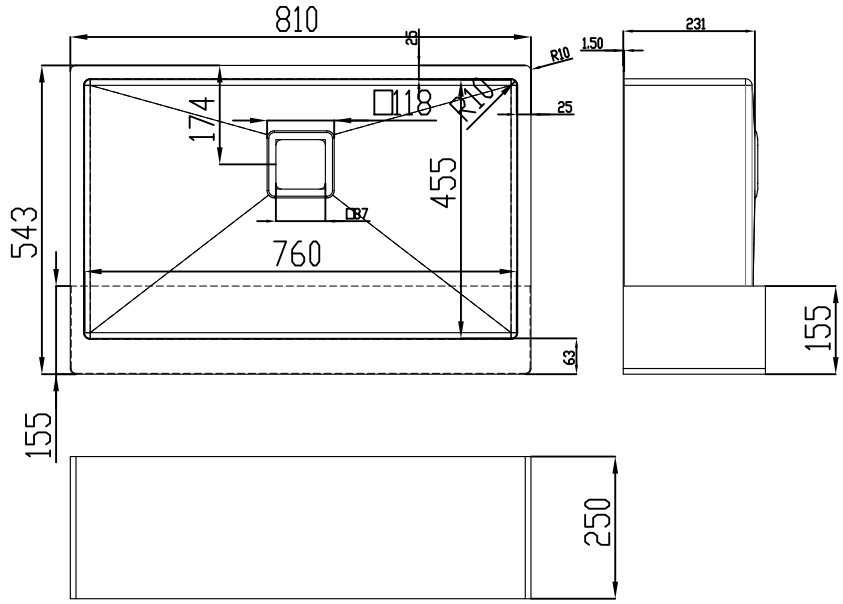

REV No	DATE	REVISION DESCRIPTION	APV'D
.	.	.	.
.	.	.	.
.	.	.	.
.	.	.	.
.	.	.	.
.	.	.	.

MATERIAL : 1.5mm 304 St.St
SCALE: 1:10
DRAWN BY:
DATE DRAWN:
APPROVED BY: .
DRAWING STANDARD: AS 1100

TASMAN SINKWARE PTY. LTD.
51 NAWEENA RD REGENCY PARK SA 5010
Telephone (08) 8348 6444
Facsimile (08) 8348 6495

Olivéri

COMMERCIAL IN CONFIDENCE

THIS DOCUMENT AND ANY INFORMATION OR DESCRIPTIVE MATTER CONTAINED THEREIN IS COMMUNICATED IN CONFIDENCE AND IS THE COPYRIGHT PROPERTY OF TASMAN SINKWARE PTY LTD NEITHER THE WHOLE NOR ANY EXTRACT MAY BE DISCLOSED COPIED OR USED FOR MANUFACTURING OR TENDERING PURPOSES WITHOUT THE WRITTEN CONSENT OF TASMAN SINKWARE PTY LTD

DESCRIPTION: PR1290U SPEC SHEET

DRAWING No. PR1290U | ITEM No. . | ISSUE A

DO NOT SCALE | UNITS IN MILLIMETRES UNLESS OTHERWISE STATED | SHEET No. 1 OF 1 | SHEET SIZE A4