Professional Butler Series

All dimensions in mm

PR1263U

Double Bowl Undermount Sink With Apron

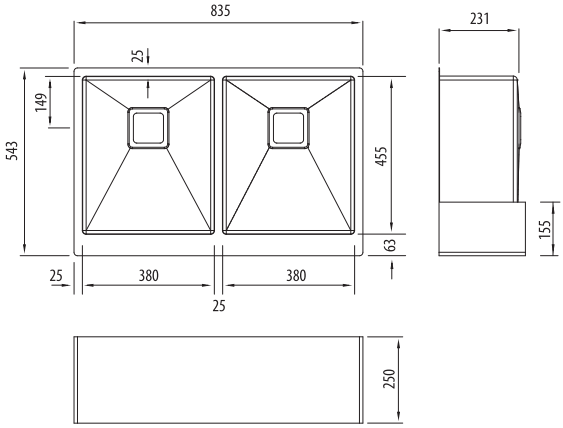

Specifications /

Sink size	835W x 543H mm
Bowl size	Main Bowl 380W x 455H x 225D / 39L
	Main Bowl 380W x 455H x 225D / 39L
Construction	Fabricated with 10 mm radius corners, Softtone® and soundproofing.
Material	304 grade, 18/10 brushed stainless steel (1.5 mm thick)
Installation	Undermount
Fixings	Undermount clips supplied
Min cabinet size	900 mm
Tap holes	N/A
Waste fittings	2 x 90 mm basket wastes included
Overflow	Not available
Carton size	920 x 575 x 290 mm
Weight	21 kg
Warranty	Lifetime manufacturer's warranty (refer to oliveri.com.au)
Maintenance and care instructions	All surfaces should be cleaned with mild liquid detergent or soap and water. To maintain the shine on your Oliveri stainless steel sink, we recommended the use of any of the easy to obtain, non-abrasive stainless steel cleaners or metal polishes.

Included accessories /

AC17SQ
Basket Waste

AC17SQ
Basket Waste

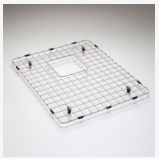

ACPSQ5
Bowl Protector

ACPSQ5
Bowl Protector

For more information call 08 8348 6444 or visit oliveri.com.au

® Registered trademark of Oliveri Solutions. Under its policy of ongoing product development Oliveri Solutions may from time to time change product specification without notice. All dimensions given are approximate and should be checked prior to installation. See oliveri.com.au for installation and warranty details.