Oslo

OS513-PSC (Pan: OS0513 / Seat: VI1273ST)
Wall Hung Toilet Suite

All dimensions in mm

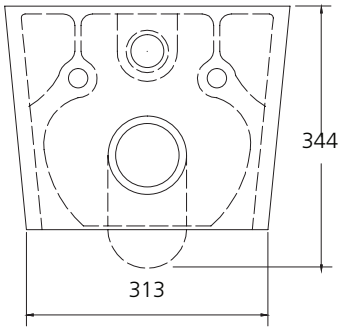

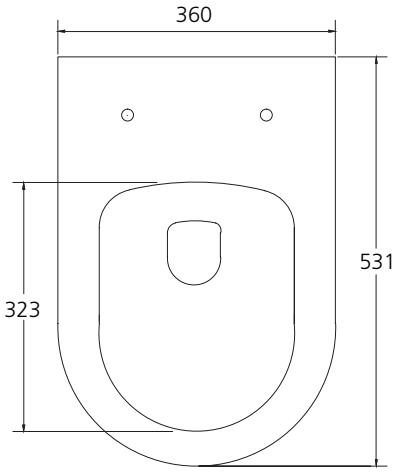

Suite includes
- Rimless Pan
- Soft close, quick release seat
- Geberit Sigma8 Duofix dual flush concealed cistern with frame*
- Fittings & fixtures

*Flush plate sold separately

Specifications /

WELS Rating	4 star, 3.5 L avg flush volume
WELS registration number	L06654
Pan	Rimless / Easy-clean design
Traps	P-trap installation
Set outs	P-trap set out refer drawing
Cistern	Geberit Sigma8 Duofix Concealed Cistern with Frame (Dual flush valve 4.5 L / 3 L)
Fixing	The toilet is fixed with a Geberit concealed water tank in wall.
Seat	Soft close and quick release toilet seat is provided as standard. Compression moulded toilet seat, fitted with buffers and metal hinges.
Flush plate	Not included. Compatible with all Geberit Sigma flush plates.
Installation	The installation of the toilet suite shall be in accordance with the normal minimum drain line grade requirements in AS/NZS 3500.2.
Material / Finish	Vitreous china / Gloss white
Weight	Pan is 26.8 kg
Parts list	UF toilet seat, Geberit double flushing valve, standard pipe.
Warranty	20 years vitreous china cistern and pan replacement of product; 5 years replacement seat; 2 years valves and fittings; 1 year seals and labour (see Oliveri website for full details)
Maintenance and care instructions	All surfaces should be cleaned with mild liquid detergent or soap and water. Do not use cream cleaners or citrus based cleaning products, as they are abrasive. Use of unsuitable cleaning agents may damage the surface. Any damage caused in this way will not be covered by warranty.

Australia 08 8348 6444 oliveri.com.au **New Zealand** 0800 440 606 oliveri.co.nz

® Registered trademark of Oliveri Solutions. Under its policy of ongoing product development Oliveri Solutions may from time to time change product specification without notice. All dimensions given are approximate and should be checked prior to installation. See Oliveri website for installation and warranty details.

Revision date: 06-03-2026

Oslo

SET OUT DRAWING

All dimensions in mm

OS513-PSC (Pan: OS0513 / Seat: VI1273ST)

Wall Hung Toilet Suite

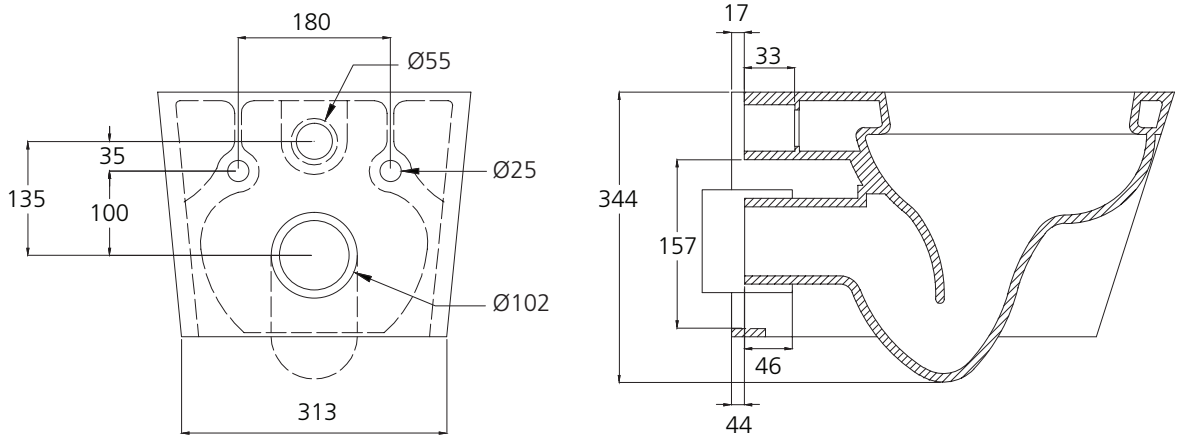

® Registered trademark of Oliveri Solutions. Under its policy of ongoing product development Oliveri Solutions may from time to time change product specification without notice. All dimensions given are approximate and should be checked prior to installation. See Oliveri website for installation and warranty details.

Revision date: 06-03-2026